BILL OF MATERIAL			
ITEM	QTY	DESCRIPTION	MASS (LBS)
A1	1	Ø2" ROUND BAR X .90±.06 LG, ASTM-A36	0.74

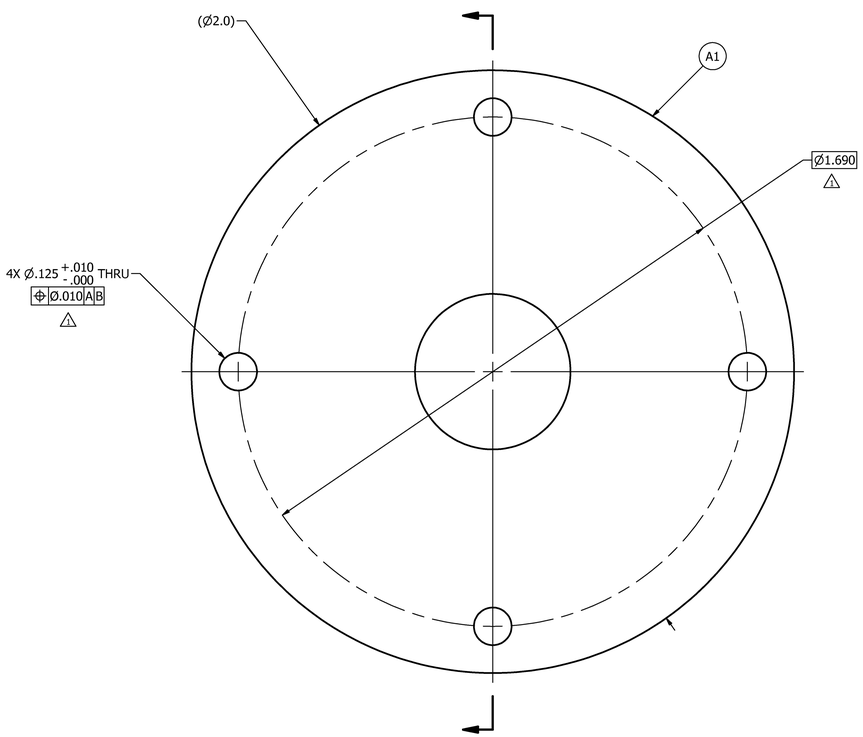

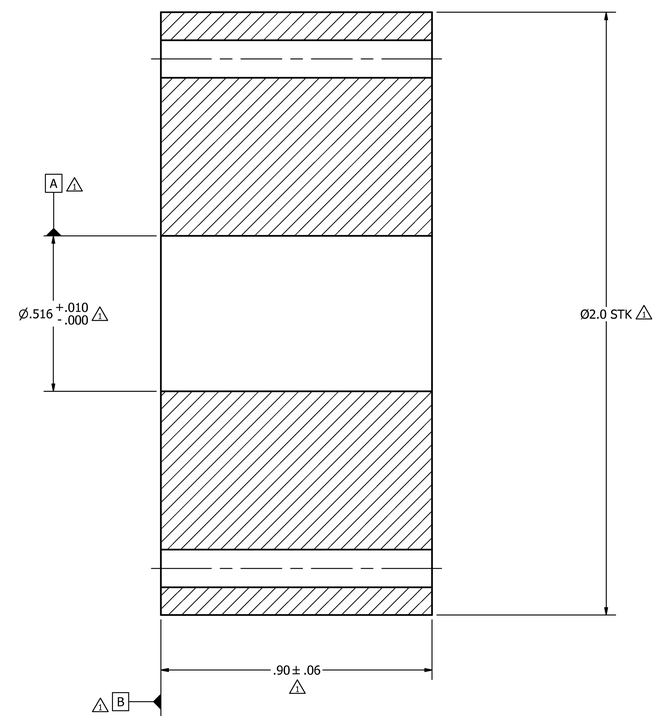

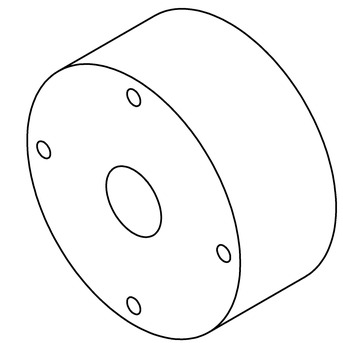

NOTES:

1. BILL OF MATERIAL SIZES ARE REFERENCE ONLY. ALL DIMENSIONS ARE FINISH SIZE.
2. UNLESS OTHERWISE SPECIFIED BREAK ALL SHARP CORNERS AND EDGES. ALL MACHINED INSIDE RADII TO BE .04 R. MAX.
3. 125 RMS FINISH ON ALL MACHINED AND STOCK SURFACES UNLESS OTHERWISE STATED.
4. FLAME CUT OR BURNED SURFACES EQUIVALENT TO 250 RMS.
5. ALL MACHINING TO BE DONE AFTER WELDING, EXCEPT WHERE REQUIRED FOR WELDING.
6. SANDBLAST IN ACCORDANCE WITH RETECH WORKMANSHIP STANDARD #099-A-M020.
7. PAINT IN ACCORDANCE WITH JOB SPECIFICATION.

NO.	DESCRIPTION	BY	DATE	APPROVALS		
1	"A1" WAS PLATE, WAS .4 THK, ADDED COUNTERBORE, ADDED GD&T	BSS	8/20/2015	KAL	ERB	N/A

REVISION HISTORY

UNLESS OTHERWISE SPECIFIED DIMENSIONS ARE IN INCHES.
INTERPRET DIMENSIONS AND TOLERANCES PER ASME Y14.5 - 1994

DECIMAL: .X = ± .1, .XX = ± .03, .XXX = ± .010
FRACTION: ± 1/16
ANGULAR: .X=± 5°, .XX=± 1°, .XXX=± .5°
THIRD ANGLE PROJECTION

REFERENCE	DRAWING #	TITLE

THIS DOCUMENT CONTAINS INFORMATION WHICH IS PROPRIETARY TO RETECH SYSTEMS LLC. NO INFORMATION CONTAINED HEREIN, NOR ANY PART OF SUCH INFORMATION MAY BE REPRODUCED, TRANSFERRED TO OTHER DOCUMENTS OR DISCLOSED TO OTHERS FOR ANY PURPOSE WITHOUT THE EXPRESS WRITTEN AUTHORIZATION OF RETECH SYSTEMS LLC.

DRAWN BY:	B-WI	4/8/2015
CHECKED BY:	JDJ	4/22/2015
PROJ. ENG.:	KAL	
DESIGNER:	BSS	
OPERATIONS:	TED	5/24/2015
APPROVAL:		
APPROVAL:		
EST. TOTAL WT.:	0.74 LBS	
SCALE:	2:1	

RETECH
RETECH SYSTEMS LLC
100 HENRY STATION ROAD
UKIAH, CALIFORNIA 95482
TELEPHONE (707) 462-6522

TITLE: PAM 1RP2-CWI PLASMA FURNACE
BRIQUETTE FEEDER
CYLINDER MOUNT

DWG NO. 544-D-M163 SHT: 1 OF: 1 | 1